TECHNICAL CATALOGUE

HANDLES FOR BALL VALVES

ITAP AT A GLANCE

THE COMPANY

ITAP SpA, founded in Lumezzane (Brescia) in 1972, is currently one of the leading production companies in Italy of **valves, fittings and distribution manifolds** for plumbing and heating systems.

Thanks to a fully automated production process, with 85 transfer machines and 55 assembly lines, it is capable of producing 400,000 pieces per day.

Our innate pursuit for innovation and observance of technical regulations is supported by the company certification ISO 9001. The company has always considered its focus on quality as the main tool to obtain significant business results: today ITAP SpA is proud to offer products bearing the approval of numerous international certifying bodies.

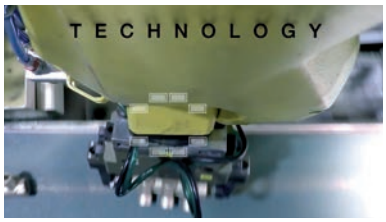

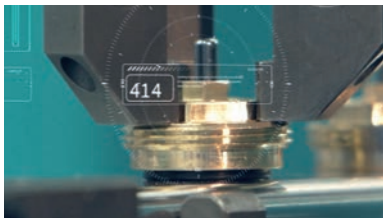

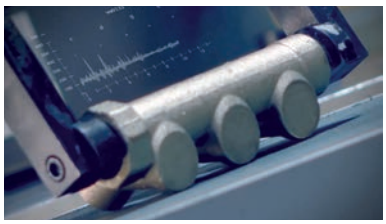

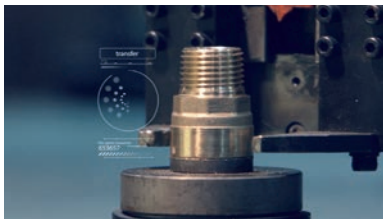

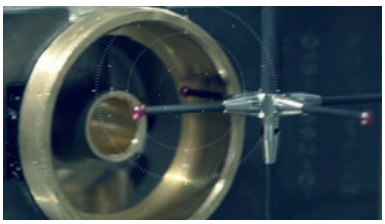

ITAP products have obtained approvals by more than 30 certification bodies from all over the world.

DVGW · WRAS · CSTB · eurofins · NF · SINTEF · ETA · zik · AR

VEMI · kiwa · WaterMark · ГОССТАНДАРТ РОССИИ · TÜV

EAC · EAC · EAC · CNAS · MA · ilac-MRA · AC

HANDLES FOR BALL VALVES

086 Lever handle for ball valves and bibcocks

MEASURE	CODE	PACKING
1	0860001	20/400
2	0860002	20/400
3	0860003	20/300
4	0860004	10/100
5	0860005	10/100
6	0860006	1/75
7	0860007	1/35

CERTIFICATIONS

Size of the handle corresponding to each valve.

Art.	1/4”	3/8”	1/2”	3/4”	1”	1”1/4	1”1/2	2”	2”1/2	3”	4”
111/112	1	1	1	2	3	3	4	4	-	-	-
076/077	1	1	2	3	3	4	5	5	-	-	-
090/091	1	1	1	3	3	4	4	5	6	7	7
290P/291P	1	1	1	3	3	4	4	5	-	-	-
116/117	1	1	1	3	3	4	4	5	6	7	7
080/081	-	-	2	3	3	4	5	5	7	7	7
131/132	-	1	1	2	2	-	-	-	-	-	-
166	-	-	1	1	-	-	-	-	-	-	-
174	-	-	1	1	-	-	-	-	-	-	-
178	-	-	1	1	-	-	-	-	-	-	-
115	-	-	1	3	3	4	4	5	-	-	-
098	-	-	1	3	3	4	4	5	-	-	-
298	-	-	1	3	3	-	-	-	-	-	-
376/377	1	1	2	3	3	4	5	5	-	-	-
120/121	-	-	-	-	-	-	-	-	7	7	7

HANDLES FOR BALL VALVES

OVERALL DIMENSIONS

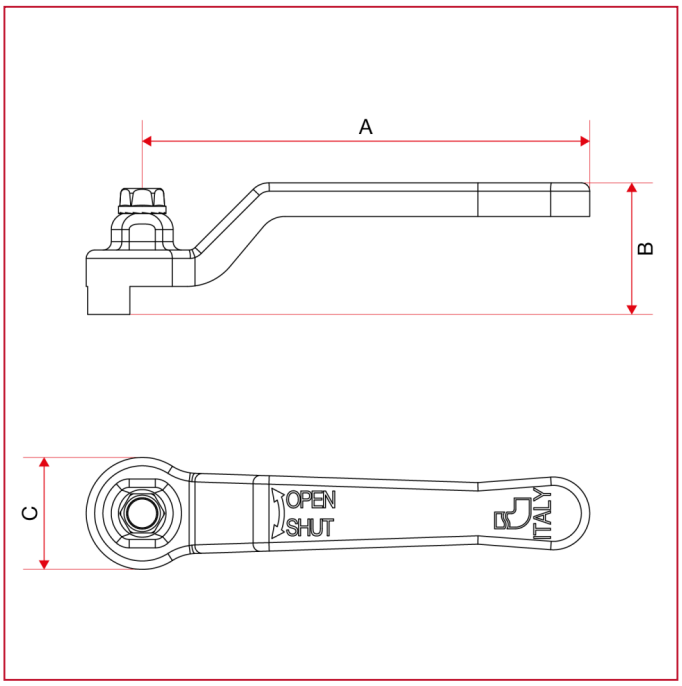

	1	2	3	4	5	6	7
A	80	88,5	113	138	157,8	197	250
B	23,5	29,5	32	41	47	54	59,5
C	20	23	25	31	37	50	59

MATERIALS

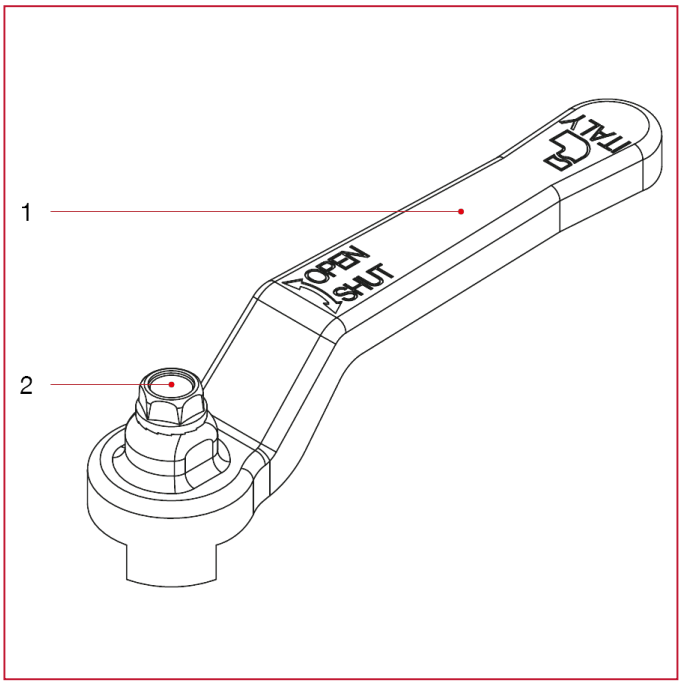

POS.	DESCRIPTION	N.	MATERIAL
1	Lever handle	1	Varnished steel P04
2	Screw	1	Zinc-plated steel C4C

HANDLES FOR BALL VALVES

086N Lever handle for ball valves and bibcocks

MEASURE	CODE	PACKING
1	0860001N	20/400
2	0860002N	20/400
3	0860003N	20/300
4	0860004N	10/100
5	0860005N	10/100
6	0860006N	1/75
7	0860007N	1/35

CERTIFICATIONS

Size of the handle corresponding to each valve.

Art.	1/4”	3/8”	1/2”	3/4”	1”	1”1/4	1”1/2	2”	2”1/2	3”	4”
111/112	1	1	1	2	3	3	4	4	-	-	-
076/077	1	1	2	3	3	4	5	5	-	-	-
090/091	1	1	1	3	3	4	4	5	6	7	7
290P/291P	1	1	1	3	3	4	4	5	-	-	-
116/117	1	1	1	3	3	4	4	5	6	7	7
080/081	-	-	2	3	3	4	5	5	7	7	7
131/132	-	1	1	2	2	-	-	-	-	-	-
166	-	-	1	1	-	-	-	-	-	-	-
174	-	-	1	1	-	-	-	-	-	-	-
178	-	-	1	1	-	-	-	-	-	-	-
115	-	-	1	3	3	4	4	5	-	-	-
098	-	-	1	3	3	4	4	5	-	-	-
298	-	-	1	3	3	-	-	-	-	-	-
376/377	1	1	2	3	3	4	5	5	-	-	-
120/121	-	-	-	-	-	-	-	-	7	7	7

HANDLES FOR BALL VALVES

OVERALL DIMENSIONS

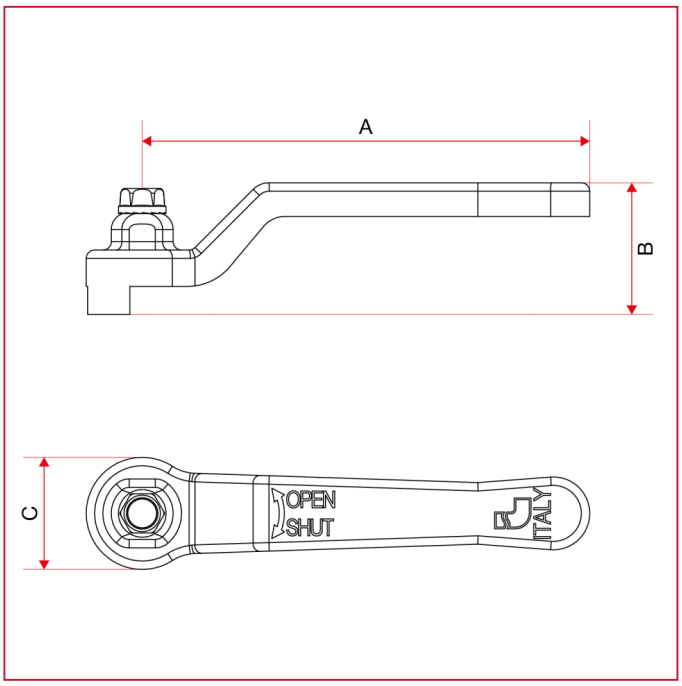

	1	2	3	4	5	6	7
A	80	88,5	113	138	157,8	197	250
B	23,5	29,5	32	41	47	54	59,5
C	20	23	25	31	37	50	59

MATERIALS

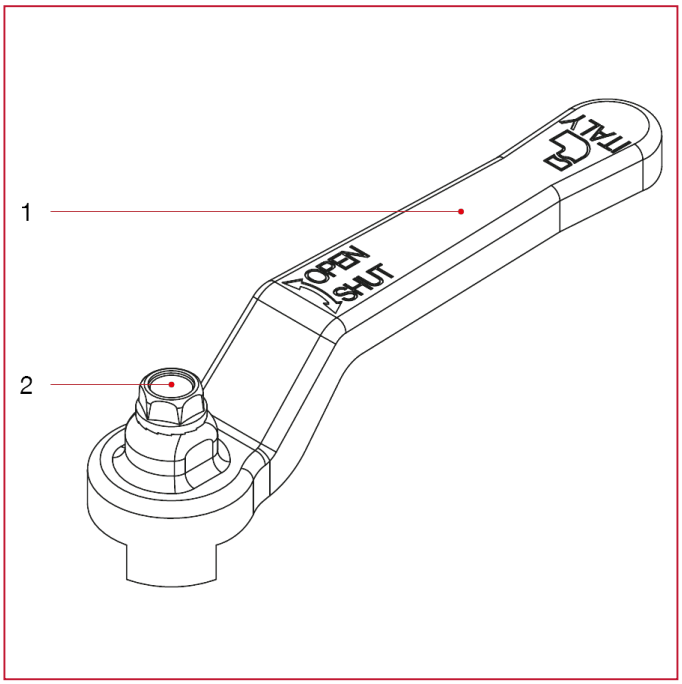

POS.	DESCRIPTION	N.	MATERIAL
1	Lever handle	1	Varnished steel P04
2	Screw	1	Zinc-plated steel C4C

HANDLES FOR BALL VALVES

086B Lever handle for ball valves and bibcocks

MEASURE	CODE	PACKING
1	0860001B	20/400
2	0860002B	20/400
3	0860003B	20/300
4	0860004B	10/100
5	0860005B	10/100

CERTIFICATIONS

Size of the handle corresponding to each valve.

Art.	1/4”	3/8”	1/2”	3/4”	1”	1”1/4	1”1/2	2”
111/112	1	1	1	2	3	3	4	4
076/077	1	1	2	3	3	4	5	5
090/091	1	1	1	3	3	4	4	5
290P/291P	1	1	1	3	3	4	4	5
116/117	1	1	1	3	3	4	4	5
080/081	-	-	2	3	3	4	5	5
131/132	-	1	1	2	2	-	-	-
166	-	-	1	1	-	-	-	-
174	-	-	1	1	-	-	-	-
178	-	-	1	1	-	-	-	-
115	-	-	1	3	3	4	4	5
098	-	-	1	3	3	4	4	5
298	-	-	1	3	3	-	-	-
376/377	1	1	2	3	3	4	5	5

HANDLES FOR BALL VALVES

OVERALL DIMENSIONS

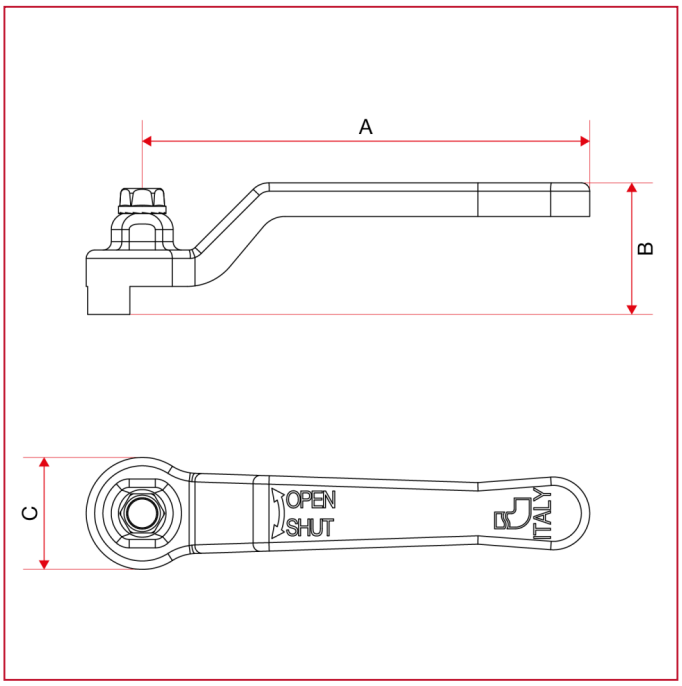

	1	2	3	4	5
A	80	88,5	113	138	157,8
B	23,5	29,5	32	41	47
C	20	23	25	31	37

MATERIALS

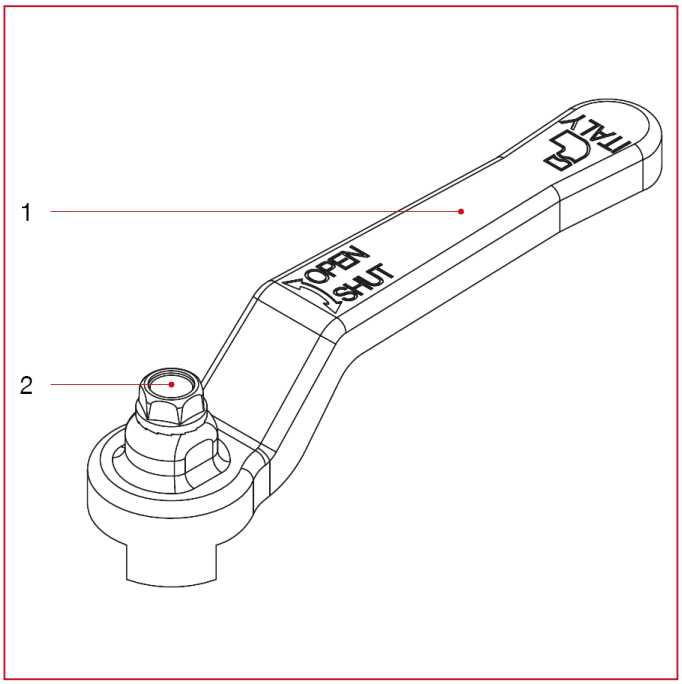

POS.	DESCRIPTION	N.	MATERIAL
1	Lever handle	1	Varnished steel P04
2	Screw	1	Zinc-plated steel C4C

HANDLES FOR BALL VALVES

084 Flat lever handle for ball valves and bibcock

MEASURE	CODE	PACKING
1	0840001	20/400
2	0840002	20/400
3	0840003	20/300
4	0840004	10/100
5	0840005	10/100

CERTIFICATIONS

Size of the handle corresponding to each valve.

Art.	1/4”	3/8”	1/2”	3/4”	1”	1”1/4	1”1/2	2”
111/112/211	1	1	1	2	3	3	4	4
090/091/290	1	1	1	3	3	4	4	5
290P/291P	1	1	1	3	3	4	4	5
116/117	1	1	1	3	3	4	4	5
216/217	1	1	1	3	3	4	4	5
080/081	-	-	2	3	3	4	5	5
131	-	-	1	-	-	-	-	-
133	-	-	1	2	2	-	-	-
167	-	-	1	1	-	-	-	-
174	-	-	1	1	-	-	-	-
178	-	-	1	1	-	-	-	-
076/077	1	1	2	3	3	4	5	5
376/377	1	1	2	3	3	4	5	5
115	-	-	1	3	3	4	4	5
098	-	-	1	3	3	4	4	5
298	-	-	1	3	3	-	-	-

HANDLES FOR BALL VALVES

OVERALL DIMENSIONS

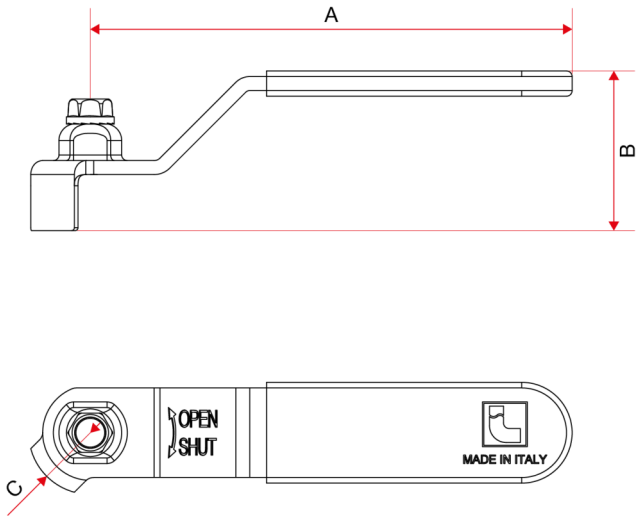

	1	2	3	4	5
A	86	93	114	138,5	158,5
B	28,5	31,5	34	42	48,5
C	22	25	27	32	39

MATERIALS

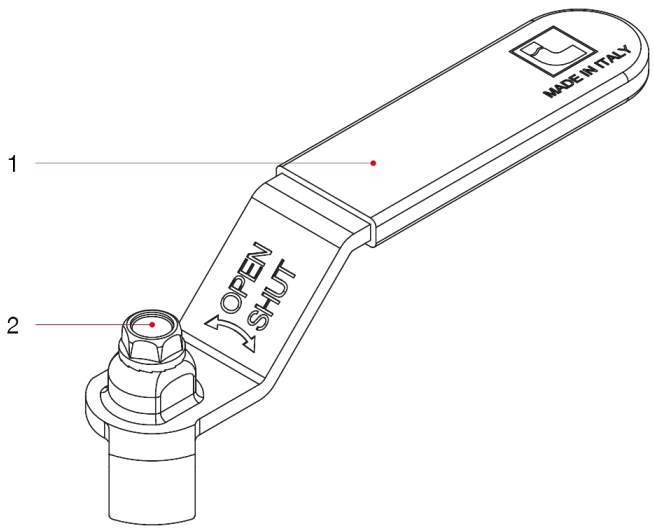

POS.	DESCRIPTION	N.	MATERIAL
1	Flat lever handle	1	Zinc-plated and plastic coated steel P04
2	Screw	1	Zinc-plated steel C4C

HANDLES FOR BALL VALVES

084V Flat lever handle for ball valves and bibcock

MEASURE	CODE	PACKING
1	0840001V	20/400
2	0840002V	20/400
3	0840003V	20/300
4	0840004V	10/100
5	0840005V	10/100

CERTIFICATIONS

Size of the handle corresponding to each valve.

Art.	1/4”	3/8”	1/2”	3/4”	1”	1”1/4	1”1/2	2”
111/112/211	1	1	1	2	3	3	4	4
090/091/290	1	1	1	3	3	4	4	5
290P/291P	1	1	1	3	3	4	4	5
116/117	1	1	1	3	3	4	4	5
216/217	1	1	1	3	3	4	4	5
080/081	-	-	2	3	3	4	5	5
131	-	-	1	-	-	-	-	-
133	-	-	1	2	2	-	-	-
167	-	-	1	1	-	-	-	-
174	-	-	1	1	-	-	-	-
178	-	-	1	1	-	-	-	-
076/077	1	1	2	3	3	4	5	5
376/377	1	1	2	3	3	4	5	5
115	-	-	1	3	3	4	4	5
098	-	-	1	3	3	4	4	5
298	-	-	1	3	3	-	-	-

HANDLES FOR BALL VALVES

OVERALL DIMENSIONS

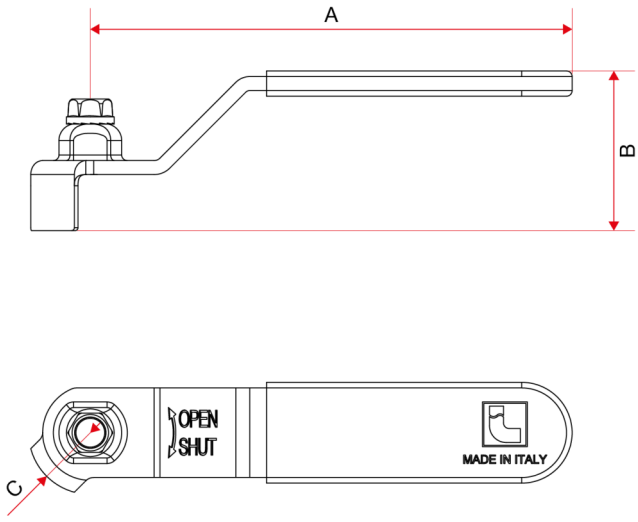

	1	2	3	4	5
A	86	93	114	138,5	158,5
B	28,5	31,5	34	42	48,5
C	22	25	27	32	39

MATERIALS

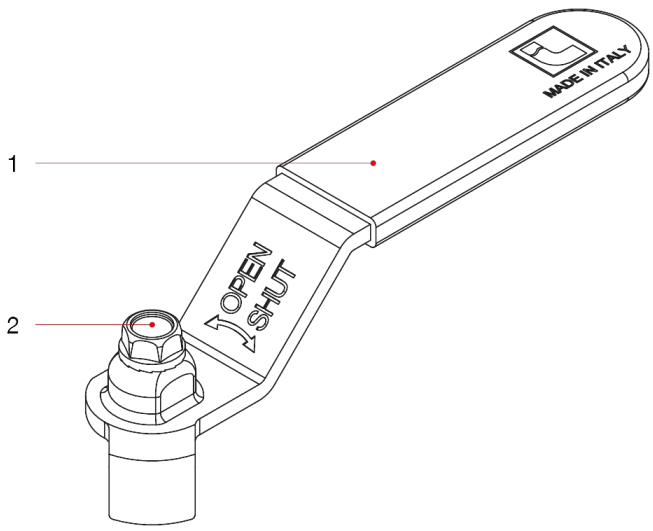

POS.	DESCRIPTION	N.	MATERIAL
1	Flat lever handle	1	Zinc-plated and plastic coated steel P04
2	Screw	1	Zinc-plated steel C4C

HANDLES FOR BALL VALVES

089B Stainless steel flat lever handle for ball valves

MEASURE	CODE	PACKING
1	0890001B	20/400
2	0890002B	20/400
3	0890003B	20/400
4	0890004B	10/100
5	0890005B	10/100

TECHNICAL SPECIFICATIONS

Flat lever handle in stainless steel AISI 304.

Size of the handle corresponding to each valve.

Art.	1/4”	3/8”	1/2”	3/4”	1”	1”1/4	1”1/2	2”
111/112/211	1	1	1	2	3	3	4	4
090/091/290	1	1	1	3	3	4	4	5
290P/291P	1	1	1	3	3	4	4	5
290XB/291XB	1	1	1	3	3	4	4	5
116/117	1	1	1	3	3	4	4	5
216/217	1	1	1	3	3	4	4	5
080/081	-	-	2	3	3	4	5	5
131	-	-	1	-	-	-	-	-
133	-	1	1	2	2	-	-	-
167	-	-	1	1	-	-	-	-
174	-	-	1	1	-	-	-	-
178	-	-	1	1	-	-	-	-
076/077	1	1	2	3	3	4	5	5
276XB/277XB	1	1	2	3	3	4	5	5
376/377	1	1	2	3	3	4	5	5
115	-	-	1	3	3	4	4	5
098	-	-	1	3	3	4	4	5
298	-	-	1	3	3	-	-	-

HANDLES FOR BALL VALVES

OVERALL DIMENSIONS

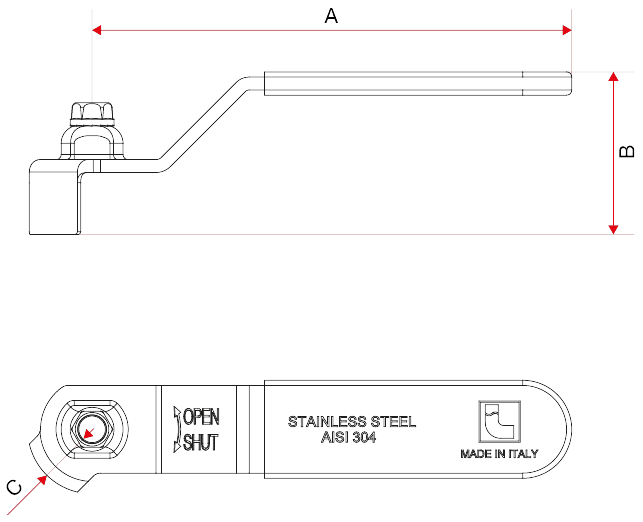

	1	2	3	4	5
A	86	93	114	138,5	158,5
B	28,5	31,5	34	42	48,5
C	11	25	27	32	39

MATERIALS

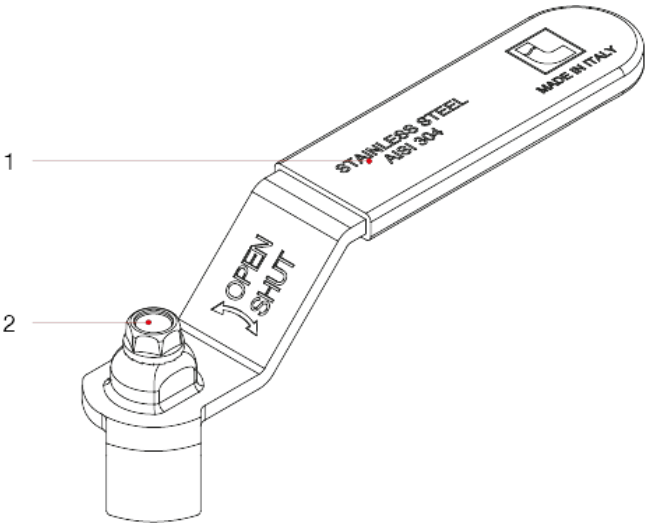

POS.	DESCRIPTION	N.	MATERIAL
1	Flat lever handle	1	Stainless steel AISI 304
2	Screw	1	Stainless steel AISI 430

HANDLES FOR BALL VALVES

084LK Locking device for lockable flat lever handle

This device has to be used on valves and biblocks with flat lever handle.
Handle size corresponding to each valve as per table art. 084, 084V, 084G and 089B with grey background.

MEASURE	CODE	PACKING
1	084LK01	10/400
2	084LK02	10/400
3	084LK03	10/400

CERTIFICATIONS

TECHNICAL SPECIFICATIONS

Zinc-plated K5 Zamak.
The device is supplied without padlock.
Suitable padlock with long shackle: 6mm / 1/4.

Size of the handle corresponding to each valve.

Art.	1/4"	3/8"	1/2"	3/4"	1"	1"1/4
111/112	1	1	1	2	3	3
211	1	1	1	2	3	3
090/091	1	1	1	3	3	-
290	1	1	1	3	3	-
290P/291P	1	1	1	3	3	-
116/117	1	1	1	3	3	-
216/217	1	1	1	3	3	-
131/132	-	1	1	2	2	-
133	-	1	1	2	2	-
167	-	-	1	1	-	-
174	-	-	1	1	-	-
178	-	-	1	1	-	-
066/067	1	1	2	3	3	-
266/267	1	1	2	3	3	-
076/077	1	1	2	3	3	-
376/377	1	1	2	3	3	-
115	-	-	1	3	3	-
098	-	-	1	3	3	-
298	-	-	1	3	3	-

HANDLES FOR BALL VALVES

OVERALL DIMENSIONS

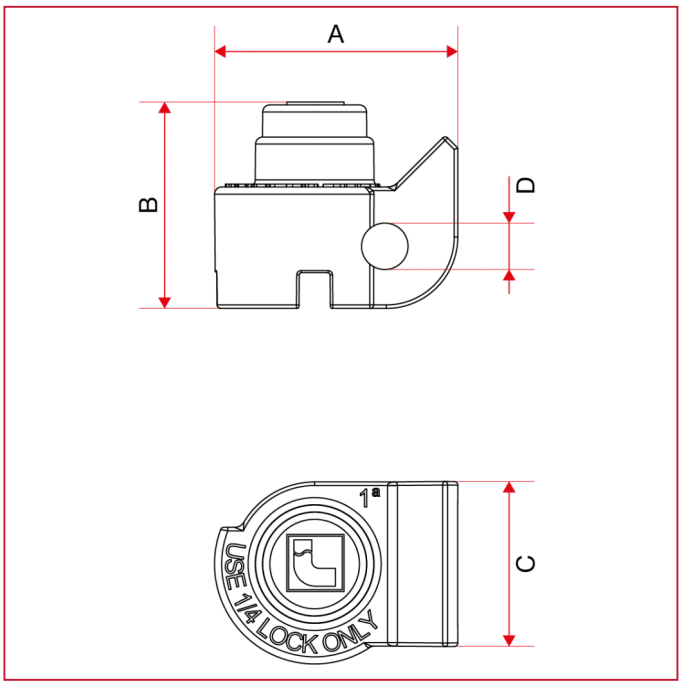

	1	2	3
A	34	35	38
B	28,9	29,9	30,9
C	25,5	27	29,5
D	6,5	6,5	6,5

MATERIALS

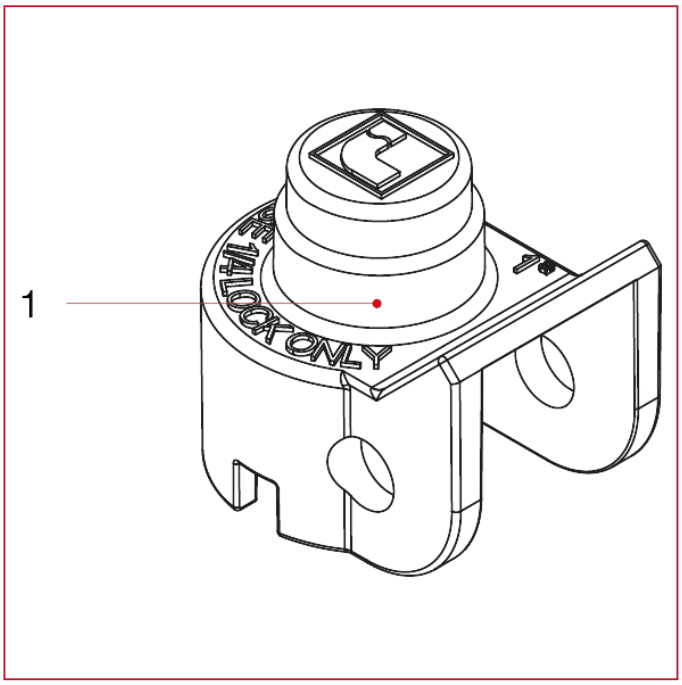

POS.	DESCRIPTION	N.	MATERIAL
1	Body	1	Zinc-plated Zamak (K5)

INSTALLATION OF THE LOCKING DEVICE FOR LOCKABLE FLAT LEVER HANDLE

When the valve is not equipped with a flat lever handle, it is possible to replace the standard handle as shown in this catalogue, in order to have a lockable valve.

When the valve is not equipped with a flat lever handle, it is possible to replace the standard handle as shown in this catalogue, in order to have a lockable valve.

1. Remove the handle from the valve, when you want to have a lockable valve.

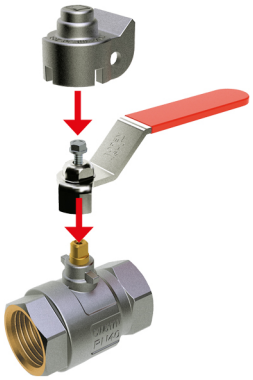

2. Replace the handle with the corresponding flat lever handle, in order to have a lockable valve.

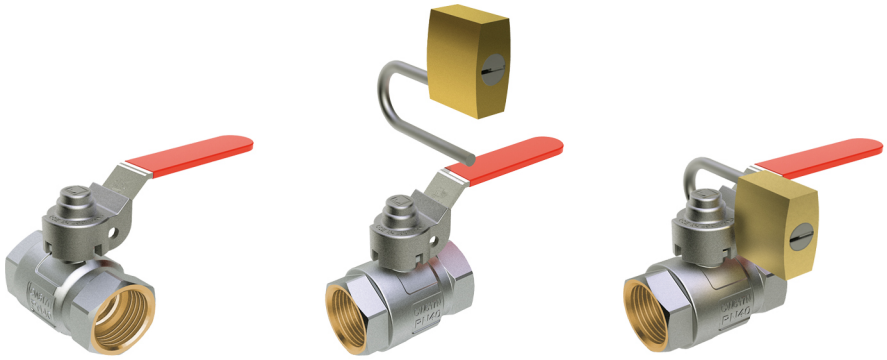

3. Place and lock the locking device either on the open or on the shut-off valve.

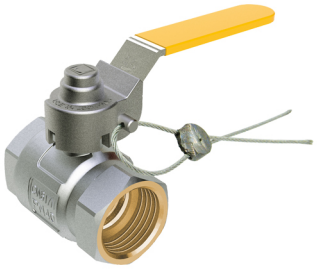

4. 084PP - Pin for locking device. Usable on water or gas valves.

HANDLES FOR BALL VALVES

084PP Pin for locking device

CODE	PACKING
084PP03	1/0

CERTIFICATIONS

TECHNICAL SPECIFICATIONS

084PP - Pin for locking device.
Usable on water or gas valves.

OVERALL DIMENSIONS

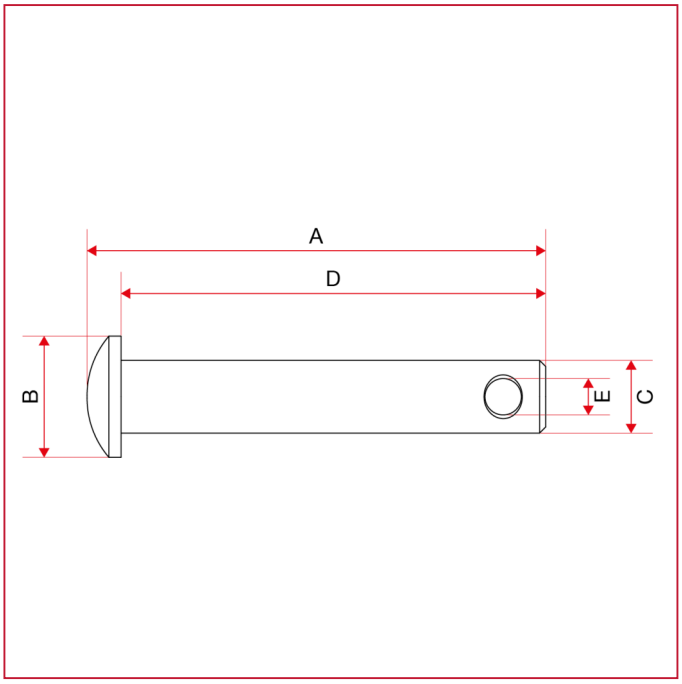

A	37,8
B	10
C	6
D	35
E	3

HANDLES FOR BALL VALVES

MATERIALS

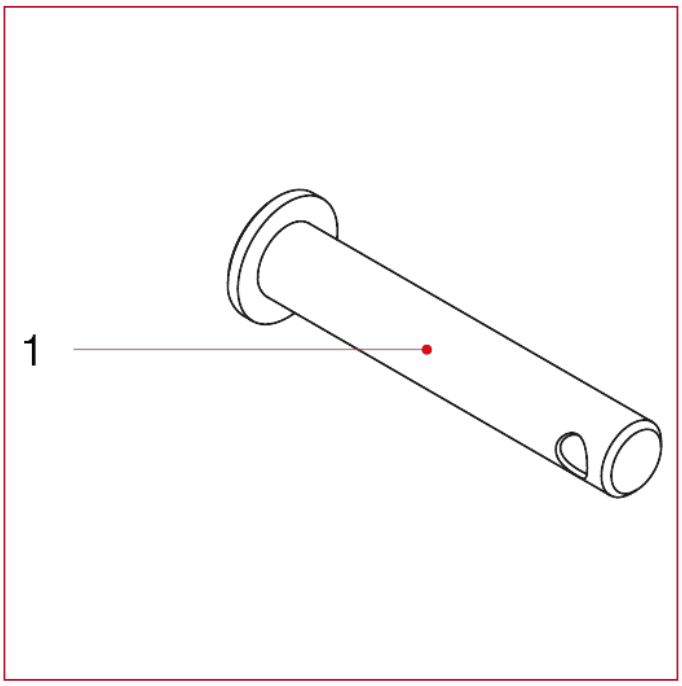

POS.	DESCRIPTION	N.	MATERIAL
1	Body	1	Zinc-plated steel AVpb

HANDLES FOR BALL VALVES

087 T handle for ball valves and bibcocks

MEASURE	CODE	PACKING
1	0870001	20/500
2	0870002	20/500
3	0870003	20/500
4	0870004	10/250

CERTIFICATIONS

Size of the handle corresponding to each valve.

Art.	1/4”	3/8”	1/2”	3/4”	1”	1”1/4	1"1/2
113/114	1	1	1	2	2	-	-
092/093	1	1	1	3	3	4	-
292P/293P	1	1	1	3	3	4	-
118/119	1	1	1	2	3	-	-
082/083	-	-	2	3	3	-	-
131	-	-	1	-	-	-	-
134	-	1	1	2	3	-	-
168	-	-	1	1	-	-	-
176	-	-	1	1	-	-	-
180	-	-	1	1	-	-	-
078/079	1	1	2	3	3	-	-
378/379	1	1	2	3	3	-	-
098	-	-	1	3	3	4	-
298	-	-	1	3	3	-	-
115	-	-	1	2	3	4	4

HANDLES FOR BALL VALVES

OVERALL DIMENSIONS

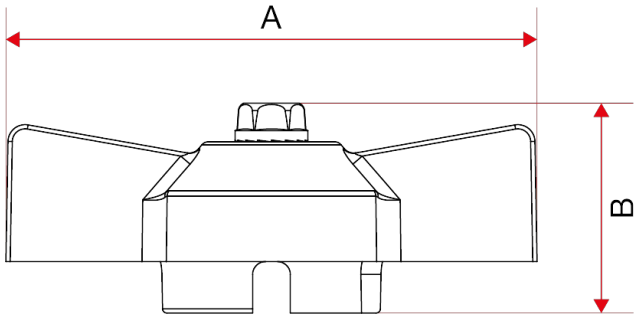

	1	2	3	4
A	47	54	62	70
B	23,5	24,8	24,5	30

MATERIALS

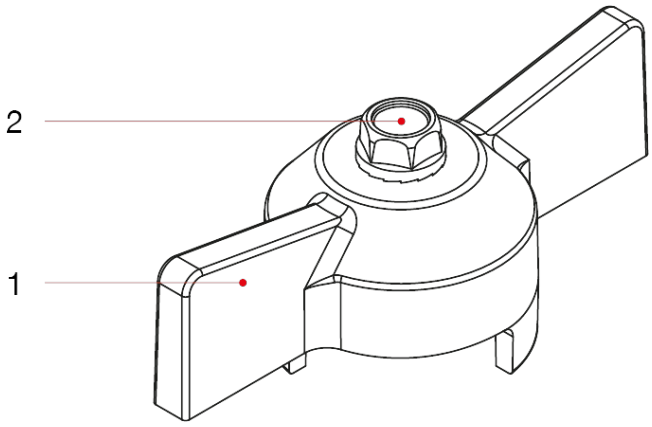

POS.	DESCRIPTION	N.	MATERIAL
1	T handle	1	Varnished aluminium
2	Screw	1	Zinc-plated steel C4C

HANDLES FOR BALL VALVES

087N T handle for ball valves and bibcocks

MEASURE	CODE	PACKING
1	0870001N	20/500
2	0870002N	20/500
3	0870003N	20/500
4	0870004N	10/250

CERTIFICATIONS

Size of the handle corresponding to each valve.

Art.	1/4”	3/8”	1/2”	3/4”	1”	1”1/4	1"1/2
113/114	1	1	1	2	2	-	-
092/093	1	1	1	3	3	4	-
292P/293P	1	1	1	3	3	4	-
118/119	1	1	1	2	3	-	-
082/083	-	-	2	3	3	-	-
131	-	-	1	-	-	-	-
134	-	1	1	2	3	-	-
168	-	-	1	1	-	-	-
176	-	-	1	1	-	-	-
180	-	-	1	1	-	-	-
078/079	1	1	2	3	3	-	-
378/379	1	1	2	3	3	-	-
098	-	-	1	3	3	4	-
298	-	-	1	3	3	-	-
115	-	-	1	2	3	4	4

HANDLES FOR BALL VALVES

OVERALL DIMENSIONS

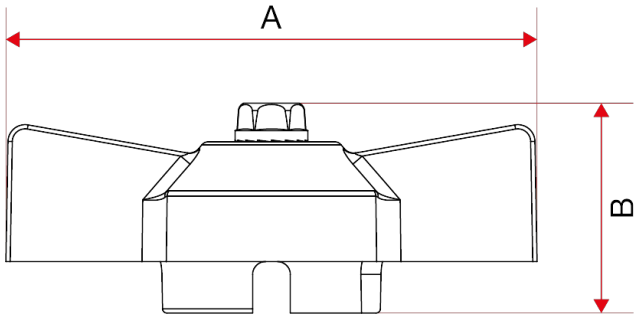

	1	2	3	4
A	47	54	62	70
B	23,5	24,8	24,5	30

MATERIALS

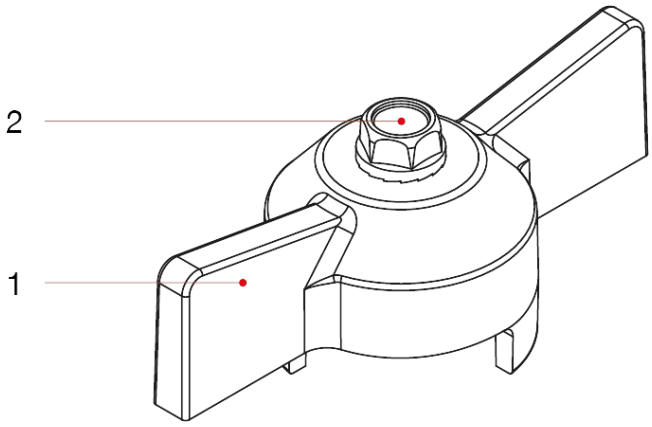

POS.	DESCRIPTION	N.	MATERIAL
1	T handle	1	Varnished aluminium
2	Screw	1	Zinc-plated steel C4C

HANDLES FOR BALL VALVES

087V T handle for ball valves and bibcocks

MEASURE	CODE	PACKING
1	0870001V	20/500
2	0870002V	20/500
3	0870003V	20/500

CERTIFICATIONS

Size of the handle corresponding to each valve.

Art.	1/4”	3/8”	1/2”	3/4”	1”
113/114	1	1	1	2	2
092/093	1	1	1	3	3
292P/293P	1	1	1	3	3
118/119	1	1	1	2	3
082/083	-	-	2	3	3
131	-	-	1	-	-
134	-	1	1	2	3
168	-	-	1	1	-
176	-	-	1	1	-
180	-	-	1	1	-
078/079	1	1	2	3	3
378/379	1	1	2	3	3
098	-	-	1	3	3
298	-	-	1	3	3
115	-	-	1	2	3

HANDLES FOR BALL VALVES

OVERALL DIMENSIONS

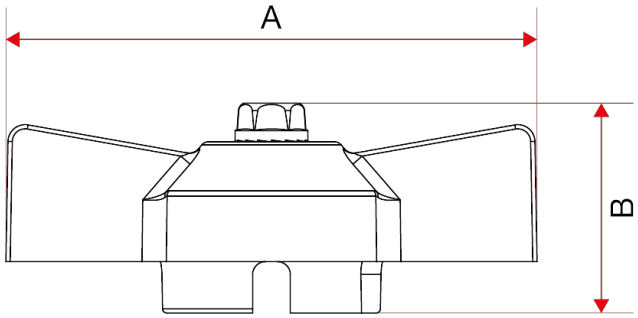

	1	2	3
A	47	54	62
B	23,5	24,8	24,5

MATERIALS

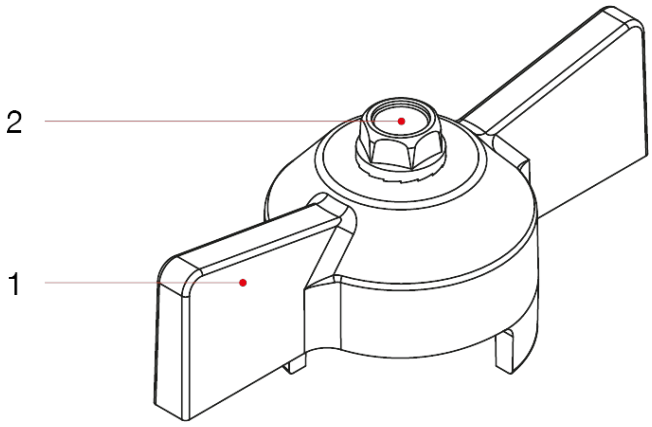

POS.	DESCRIPTION	N.	MATERIAL
1	T handle	1	Varnished aluminium
2	Screw	1	Zinc-plated steel C4C

HANDLES FOR BALL VALVES

087B T handle for ball valves and bibcocks

MEASURE	CODE	PACKING
1	0870001B	20/500
2	0870002B	20/500
3	0870003B	20/500
4	0870004B	10/250

CERTIFICATIONS

Size of the handle corresponding to each valve.

Art.	1/4”	3/8”	1/2”	3/4”	1”	1”1/4	1"1/2
113/114	1	1	1	2	2	-	-
092/093	1	1	1	3	3	4	-
292P/293P	1	1	1	3	3	4	-
118/119	1	1	1	2	3	-	-
082/083	-	-	2	3	3	-	-
131	-	-	1	-	-	-	-
134	-	1	1	2	3	-	-
168	-	-	1	1	-	-	-
176	-	-	1	1	-	-	-
180	-	-	1	1	-	-	-
078/079	1	1	2	3	3	-	-
378/379	1	1	2	3	3	-	-
098	-	-	1	3	3	4	-
298	-	-	1	3	3	-	-
115	-	-	1	2	3	4	4

HANDLES FOR BALL VALVES

OVERALL DIMENSIONS

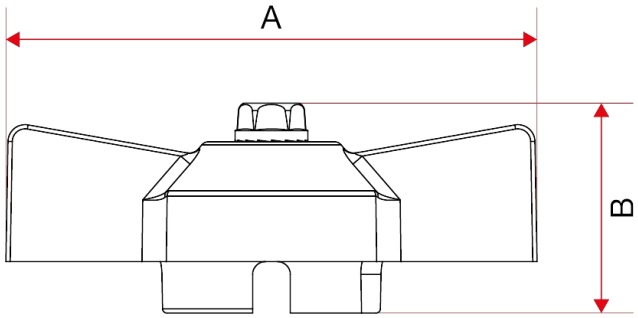

	1	2	3	4
A	47	54	62	70
B	23,5	24,8	24,5	30

MATERIALS

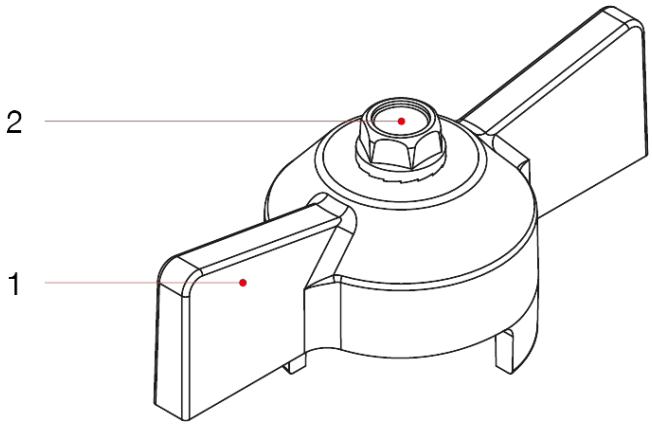

POS.	DESCRIPTION	N.	MATERIAL
1	T handle	1	Varnished aluminium
2	Screw	1	Zinc-plated steel C4C

HANDLES FOR BALL VALVES

088 Extended handle for lined piping

MEASURE	CODE	PACKING
1	0880001	10/120
2	0880002	10/120
3	0880003	10/120
4	0880004	10/80
5	0880005	10/50
6	0880006	1/30
7	0880007	1/18

CERTIFICATIONS

TECHNICAL SPECIFICATIONS

The extended handle in aluminium can be used with the valves indicated in the chart.

Size of the handle corresponding to each valve.

Art.	1/4"	3/8"	1/2"	3/4"	1"	1"1/4	1"1/2	2"	2"1/2	3"	4"
111/112	1	1	1	2	3	3	4	4	6	7	7
090/091	1	1	1	3	3	4	4	5	6	7	7
116/117	1	1	1	3	3	4	4	5	-	-	-
080/081	-	-	2	3	3	4	5	5	-	-	-
076/077	1	1	2	3	3	4	5	5	-	-	-
115	-	-	1	3	3	4	4	5	-	-	-
131/132	-	1	1	2	2	-	-	-	-	-	-
166	-	-	1	1	-	-	-	-	-	-	-
174	-	-	1	1	-	-	-	-	-	-	-
178	-	-	1	1	-	-	-	-	-	-	-
098	-	-	1	3	3	4	4	5	-	-	-
298	-	-	1	3	3	-	-	-	-	-	-
120/121	-	-	-	-	-	-	-	-	7	7	7

HANDLES FOR BALL VALVES

OVERALL DIMENSIONS

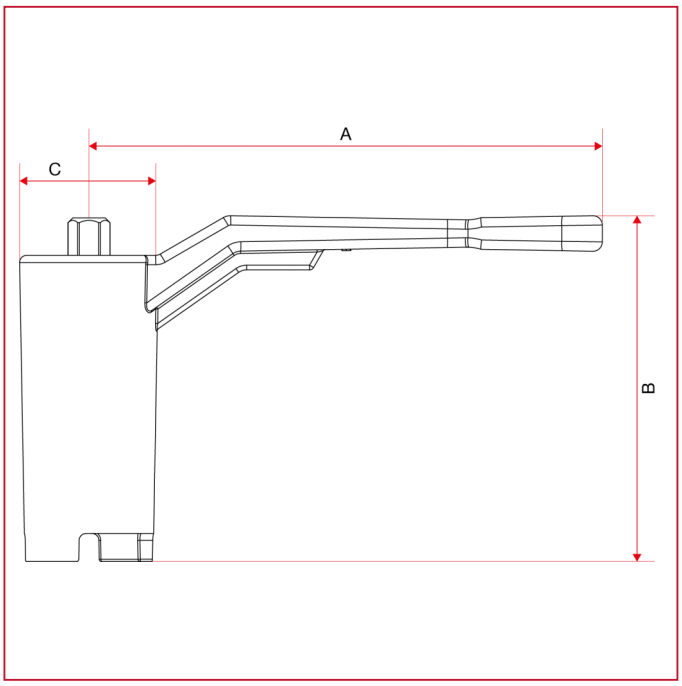

	1	2	3	4	5	6	7
A	80	88,5	110	138	158	197	250
B	60	68	74	77,6	81,7	88	119,5
C	23,63	27,32	29,73	35,2	41,17	51,71	61,42

MATERIALS

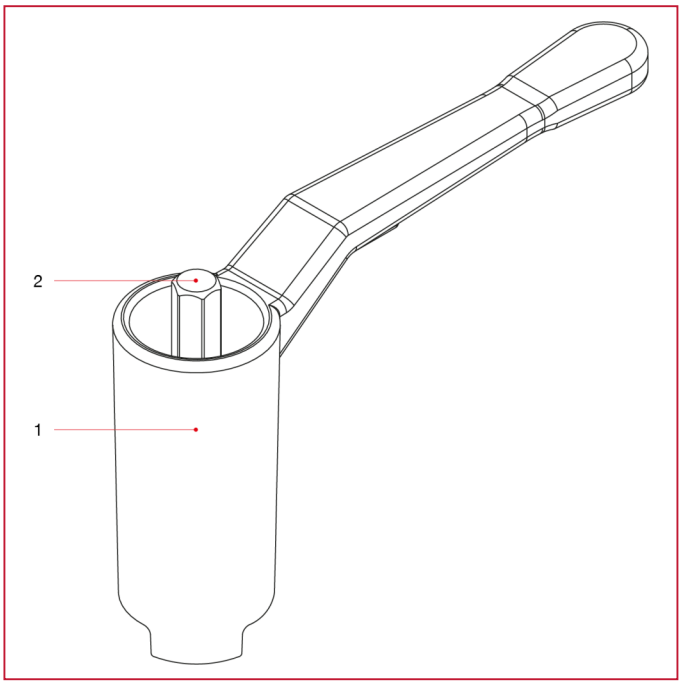

POS.	DESCRIPTION	N.	MATERIAL
1	Extended handle	1	Varnished aluminium
2	Screw	1	Zinc-plated steel AVpb

ITAP S.p.A.
Via Ruca 19
25065 Lumezzane
Brescia (ITALY)
Tel 030 8927011
Fax 030 8921990
www.itap.it - info@itap.it

We reserve the right to make improvements and changes to the products described herein and to the relative technical data, at any time and without forewarning.

rev. 20250402